confidence that lasts 10 year limited warranty

Swiss made

INSTRUCTIONS FOR USE
Slit lamp
BI 900®

4. edition / 2019 – 05

HAAG-STREIT DIAGNOSTICS

INSTRUCTIONS FOR USE
Slit lamp

BI 900®

4. edition / 2019 – 05

Introduction
Thank you for choosing a Haag-Streit device. Provided you comply carefully with the regulations in this instructions for use, we can guarantee the reliable and unproblematic use of our product.

Purpose of use
A slit lamp biomicroscope is intended for use in eye examination. It is used to aid in the diagnosis and documentation of diseases or trauma which affect the structural properties of the eye.

Contraindication
There is no absolute contraindication for tests with this device. Appropriate professional judgement and caution are necessary.

WARNING!
Read the instruction manual carefully before commissioning this product. It contains important information regarding the safety of the user and patient.

NOTE!
Federal law restricts this device to sale by or on the order of a physician or licensed practitioner.

WARNING!
This device is equipped with high intensity light emitting diodes. Excessive exposure of patients in treatment with certain medication may lead to phototoxic adverse reactions, due to higher photosensitivity.

Contents

1. Safety 4
1.1 Areas of application of the device 4
1.2 Ambient conditions 4
1.3 Shipment and unpacking 4
1.4 Installation warnings 4
1.5 Operation, environment 5
1.6 Light toxicity 5
1.7 Disinfection 5
1.8 Warranty and product liability 5
1.9 Description of symbols 5

2. Introduction 6
2.1 Overview 6
2.2 Overview LED illumination 6
2.3 LED illumination LI02 7
2.4 Blue filter 7
2.5 Periphery or background illumination 7

3. Device assembly / installation 7
3.1 Placement of adhesive label for the automatic left/right detection 7
3.2 Camera assembly 7
3.3 Cabling of the RM02 (diagram) 8
3.4 Microscope and illumination 8
3.5 Regulating the clearance of the slit width control 8
3.6 Step-by-step cabling 8

4. Startup 10
4.1 Switching on the device 10

5. Operation 10
5.1 Setting the eyepieces 10
5.2 Field of view 10
5.3 White balance 10
5.3.1 Slit lamp preparation 10
5.3.2 Conducting a white balance 10
5.4 Software / Help menu / Error messages 11
5.5 Preparing the patient 11
5.6 Operating the instrument 11
5.7 Setting the filters & diaphragms 12
5.8 Fixation star 12
5.9 Microscope and eyepiece 12
5.10 Reduced operation 12
5.11 LED display Illumination head 13
5.12 LED display power supply 13
5.13 LED display release module RM02 13
5.14 LED display camera 13
5.15 Error messages (illumination head) 14
5.16 Error messages release module RM02 14
5.17 Error messages camera 14
5.18 Software / Help menu / Error messages 15

6. Decommissioning 15

7. Technical data 15
7.1 Slit illumination 15
7.2 Power supply 15
7.3 Stereo microscope 15
7.4 Instrument base 15
7.5 Dimensions 16
7.6 Camera 16
7.7 Minimum PC requirements 16

8. Maintenance 16
8.1 Device inspection 16
8.2 Repair 16
8.3 Cleaning and disinfection 16
8.4 Replacing the illumination mirror 17
8.5 Dust cover 17

A. Appendix 17
A.1. Accessories / consumables / spare parts / upgrade 17

B. Statutory requirements 18

C. Classification 18

D. Disposal 18

E. Observed standards 18

F. Information and manufacturer's declaration concerning electromagnetic compatibility (EMC) 19
F.1 General 19
F.2 Emitted interference (standard table 1) 19
F.3 Immunity (standard table 2) 20
F.4 Immunity for non-life support devices (standard table 4) 21
F.5 Safe distances for non-life support devices (standard table 6) 22

© HAAG-STREIT AG, 3098 Koeniz, Switzerland - HS Doc. no. 1500.7220505-04040 – 2019 – 05

01-IFU_BI900-7220505-04040_eng.indd 3 07.06.2019 10:33:41

1. Safety

DANGER!
Failure to comply with these instructions may result in material damage or pose a danger to patients or users.

WARNING!
These warnings must absolutely be complied with to guarantee safe operation of the product and to avoid any danger to users and to patients.

NOTE!
Important information: please read carefully.

1.1 Areas of application of the device

The device is intended to use in professional health care facility environment, like doctor's practices, hospitals and optometrists and opticians premises, except near of HF surgical equipment and in RF shielded rooms of ME-systems for magnetic resonance imaging. Some portable radio frequency equipment, like cell phones or RF telephone equipment including antennas may interference medical devices. Such equipment has to be kept in a distance of more than 30 cm (12 inches) from any part of the instrument. Inobservance of this precaution may lower the correct function of the instrument. If unexpected disturbances are observed which manifest themselves as communication problems between Imaging Module and EyeSuite software, the cause could be a cell phone or RF telephone in the immediate vicinity to the slit lamp or power supply. Increase the distance to the unit until the interference disappears.
The communication between imaging module and PC may also be disturbed or interrupted, if the device is exposed to a mains power supply delivering excessively transient disturbances or short voltage interruptions. If this happens, the USB connector needs to be disconnected for a short time or the PC needs to be restarted.

1.2 Ambient conditions

Transport:	Temperature	from	−40°C	to	+70°C
	Air pressure	from	500 hPa	to	1060 hPa
	Relative humidity	from	10%	to	95%
Storage:	Temperature	from	−10°C	to	+55°C
	Air pressure	from	700 hPa	to	1060 hPa
	Relative humidity	from	10%	to	95%
Use:	Temperature	from	+10°C	to	+35°C
	Air pressure	from	800 hPa	to	1060 hPa
	Relative humidity	from	30%	to	90%

1.3 Shipment and unpacking

- Before you unpack the appliance, check whether the packaging shows traces of incorrect handling or damage. If this is the case, notify the transport company that has delivered the goods to you. Unpack the equipment together with a representative of the transport company. Make a report of any damaged parts. This report must be signed by you and by the representative of the transport company.
- Leave the device in the packaging for a few hours before unpacking it (condensation).
- Check the appliance for damage after it is unpacked. Return defective appliances in the appropriate packaging.
- Store packaging material carefully so that it can be used for potential returns or when moving.
- The slit lamp and head rest must be installed on an electrically insulated, fireproof table top.
- The rail covers (a) prevent the slit lamp from tilting.
- Are the connection parts of the accessories in the correct position (screw connections, quick-release fasteners)?

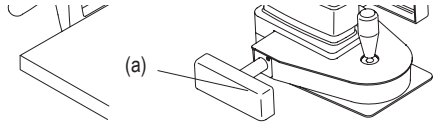

1.4 Installation warnings

WARNING!
- Do not modify this equipment without authorization of the manufacturer. Installation and repairs may only be performed by trained specialists.
- Any third-party device must be connected in compliance with the EN 60601-1 standard.
- Only original Haag-Streit (HS) replacement parts may be used.
- The device must not be stacked or placed in close proximity to other electronic devices.
- Grounding reliability can only be achieved when unit is connected to a hospital grade receptacle. (Not valid for EU countries).

© HAAG-STREIT AG, 3098 Koeniz, Switzerland - HS Doc. no. 1500.7220505-04040 – 2019 – 05

01-IFU_BI900-7220505-04040_eng.indd 4 07.06.2019 10:33:41

1.5 Operation, environment

DANGER!
Never use the device in potentially explosive environments where volatile solvents (alcohol, petrol, etc.) and flammable anaesthetics are in use.

WARNING!
The device must be switched off after every use. Otherwise there is a risk of overheating when a protective dust cover is used.

NOTE!
This equipment must only be operated by qualified personnel. The owner is responsible for their training. This device may only be used in accordance with the instructions in "Purpose of use".

1.6 Light toxicity

WARNING!
As extended, intensive illumination can damage the retina, the use of the device in the examination of the eye should not be prolonged unnecessarily. The illumination of this slit lamp emits a radiation in the range between 400 and 750nm. The retinal dose for a photochemical risk is composed of the product of the radiance and the exposure time. If the radiance is halved, the time until the exposure time limit value is reached will double accordingly. To date, no acute, optical radiation hazard has been detected in slit lamps. Nevertheless, we recommend keeping the intensity of the light reaching the patient's retina to the minimum possible for the respective diagnosis. Children, people with aphakia and people suffering from eye conditions are most at risk. An increased risk may also occur if the retina is exposed to the same or a similar device with a visible light source within 24 hours. This applies, in particular, if the retina has been photographed with a flashbulb in advance. The light from this instrument may be dangerous. The risk of eye damage increases with the exposure time. An exposure time with this instrument at maximum intensity of longer than 131 seconds exceeds the guideline value for a risk.

1.7 Disinfection

NOTE!
The device does not need to be disinfected. For more information on cleaning, please refer to the 'Maintenance' section.

© HAAG-STREIT AG, 3098 Koeniz, Switzerland - HS Doc. no. 1500.7220505-04040 – 2019 – 05

1.8 Warranty and product liability

- Haag-Streit products must be used only for the purposes and in the manner described in the documents distributed with the product.
- The product must be treated as described in the 'Safety' chapter. Improper handling can damage the product. This would void all guarantee claims.
- Continued use of a product damaged by incorrect handling may lead to personal injury. In such a case, the manufacturer will not accept any liability.
- Haag-Streit does not grant any warranties, either expressed or implied, including implied warranties of merchantability or fitness for a particular use.
- Haag-Streit expressly disclaims liability for incidental or consequential damage resulting from the use of the product.
- This product is covered by a limited warranty granted by your seller.

For USA only:

- This product is covered by a limited warranty, which may be reviewed at www.haag-streit-usa.com.

1.9 Description of symbols

Follow instruction for use	Read the instructions for use attentively
Notes on disposal, see the 'Disposal' chapter	Date of manufacture
Manufacturer	SN Serial number
REF HS reference number	CE European certificate of conformity
MET Listed Mark with approval for USA and Canada	On (Power)
Plug socket USB 3.0 micro B on RM02 for computer	Plug socket USB 3.0 on RM02 for camera
Strong permanent magnets	Slit lamp illumination
Background illumination	Plug socket on RM02 for power supply

01-IFU_BI900-7220505-04040_eng.indd 5 07.06.2019 10:33:44

ETL Listed Mark with approval for USA and Canada

Testsymbol of TÜV Rheinland with approval for INMETRO Brasil

2. Introduction

The slit lamp comprises an illumination and a binocular microscope. The entire device can be moved in front of the eyes using the instrument base. The illumination offers a range of setting possibilities for making the practically invisible areas of the eye visible. There is also a range of accessories available for the slit lamp to allow special diagnosis possibilities in addition to the general examinations.

NOTE!
The BI 900 slit lamp can be optionally equipped with the imaging set *(REF 7220535)*.

2.1 Overview

1. Lamp cable
2. LED illumination LI 900
3. Filter lever
4. Optical light guide for periphery or background illumination (option)
5. Slit length, slit rotation, blue filter and fixation star control, knob for rotating the slit
6. Scale for angled position of the slit image (5° increments)
7. Periphery or background illumination FI01f (option)
8. Illumination mirror
9. Diffusing lens
10. Headrest (see separate instructions)
11. Protective cover
12. Illumination unit / microscope angle scale
13. Illumination arm locking screw
14. Microscope arm locking screw
15. Camera cable (option)
16. Release module RM02
17. Sticker left/right identification
18. Axle
19. Rail cover
20. Cover cap for the accessories base
21. Stereo microscope
22. Eyepieces
23. Mounting screw for breath shield (option)
24. Breath shield (option)
25. Centering screw for illumination
26. Camera operational control LED (option)
27. Inclination angle latch 0 – 20°
28. Slit width controls
29. Roller rail
30. Control lever
31. Camera (option)
32. Slide plate
33. EyeSuite Imaging software (option)
34. Power supply
35. Electric power supply lead (country-dependent)

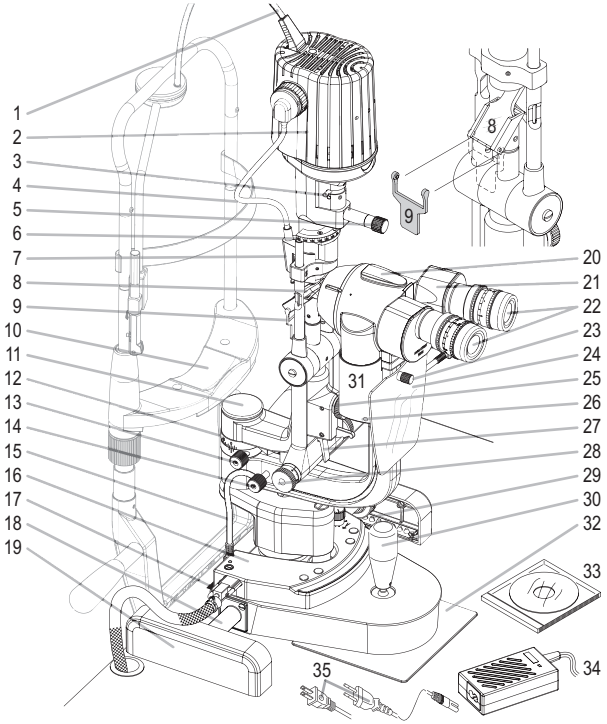

2.2 Overview LED illumination

36. LED illumination LI02 plus with periphery or background lighting
37. Plug connection
38. Filter wheel for blue filter
39. Connection periphery or background illumination
40. Cover

© HAAG-STREIT AG, 3098 Koeniz, Switzerland - HS Doc. no. 1500.7220505-04040 – 2019 – 05

01-IFU_BI900-7220505-04040_eng.indd 6 07.06.2019 10:33:44

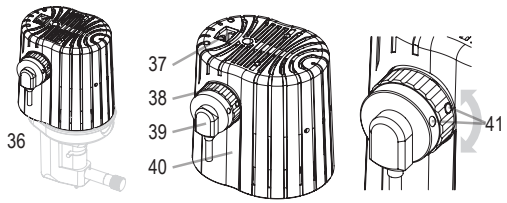

2.3 LED illumination LI02

2.4 Blue filter

41. The rotating wheel is used to pivot the blue filter for the background illumination. Marking points at the same height = blue filter is on.

2.5 Periphery or background illumination

This periphery or background illumination may only be used in conjunction with an LI02 plus LED illumination.

42. Periphery or background illumination, fixed
43. Periphery or background illumination, swiveling (option)

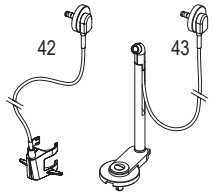

3. Device assembly / installation

WARNING!

- Do not modify this equipment without authorization of the manufacturer. Installation and repairs may only be performed by trained specialists. Contact your Haag-Streit representative for installation, repairs and modification work on the system. The contact details are available at www.haag-streit.com.
- Only original Haag-Streit replacement parts may be used.

3.1 Placement of adhesive label for the automatic left/right detection

- Remove rail cover (19) and place slit lamp aside. Clean surface of table.
- Remove protective film from the back of the adhesive label. Carefully start at the corner opposite the black surface.
- Position the sticker against the right roller rail (45) and the gliding plate (46). Press firmly on the white/black surface, press away any air bubbles.
- Carefully tear off the remainder of the adhesive label (44) along the perforation.
- Reassemble the slit lamp and rail cover.

44. Rest of the sticker
45. Roller rail
46. Gliding plate

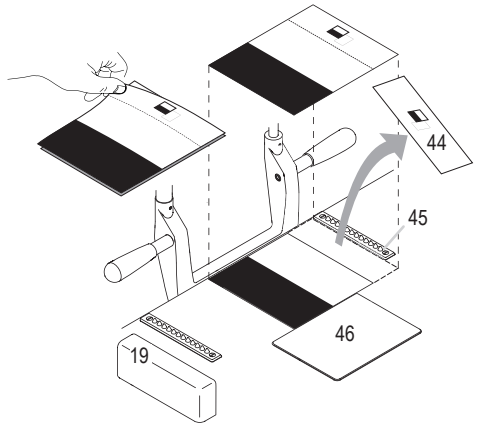

3.2 Camera assembly

- Remove the cover caps from the camera and adapter.
- Screw the camera (48) onto the adapter.
- Position the image upright setting on the monitor: slightly loosen the 3 retaining screws (47), turn the camera around its vertical axis until the position is correct; reaffix the camera. Through the software, the image can be displayed horizontally or vertically.
- Mount the camera casing (50) and fix in place with screws (49)

47. Retaining screws
48. Camera
49. Fastening screws
50. Camera casing

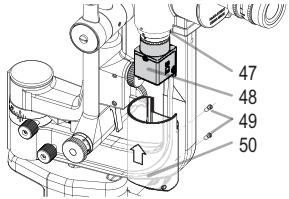

© HAAG-STREIT AG, 3098 Koeniz, Switzerland - HS Doc. no. 1500.7220505-04040 – 2019 – 05

01-IFU_BI900-7220505-04040_eng.indd 7 07.06.2019 10:33:45

3.3 Cabling of the RM02 (diagram)

WARNING!
- Only use the supplied USB 3.0 cable (*REF 1022373*) for the connection to the PC.
- Only use medically approved PCs or operate via a medically approved isolating transformer.
- Auxiliary units on the PC (e.g. printer, monitor) must be operated through an isolating transformer.
- Ethernet may only be used through a galvanic isolation in accordance with EN 60601-1.
- The power supply unit's mains connector must be accessible in order to allow for disconnection from the electric mains at any time.

51. Power grid
52. Med. approved isolating transformer
53. Instrument table
54. Med. approved power supply
55. Printer
56. Screen
57. Personal computer
58. Local network
59. Galvanic isolation (EN 60601-1)
60. Headrest
61. Cable headrest / LED illumination / RM02
62. Release module RM02
63. LED illumination
64. Camera

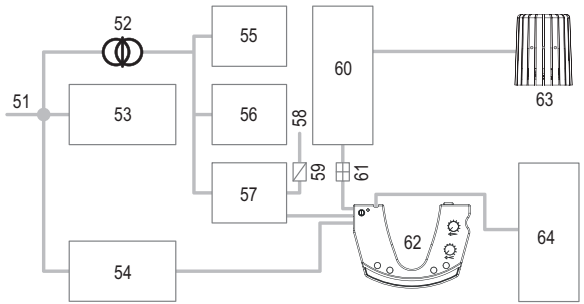

NOTE!
To ensure that the system works correctly, Haag-Streit recommends not using laptops and using a high-quality desktop computer instead.

65. Fastening screw
66. Two-pole connection plug

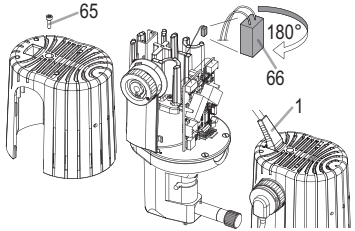

If the middle LED lights up red during operation, the two-pole connection plug (66) is connected incorrectly.
- Disconnect the device from the power grid
- Remove the cover on the upper part of the illumination facility by loosening the fastening screw (65).
- Turn the two-pole connection plug (66) 180°.
- Fix the cover on the upper part of the illumination facility with the fastening screw (65).
- Connect the device to the power grid again.

WARNING!
- Keep magnet-sensitive storage media (e.g. credit cards) away from the magnets on the release module RM02!
- Only external medical power supplies approved by Haag-Streit that fulfill EN 60601-1 may be used.

3.4 Microscope and illumination
- The slit lamp is packaged and shipped fully assembled. The transport safety devices must be removed before commissioning.
- Fix the breath shield (24) in place by fastening the mounting screw (23) on the inside of the bearer arm.

3.5 Regulating the clearance of the slit width control
The small screw in the center of the right control knob (A) allows you to regulate the friction of the turning movement of these adjusting knobs. Turning it slightly to the right (in) makes it harder, turning it left (out) makes it easier. It should at least be set so hard that the slit cannot close on its own.

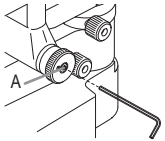

3.6 Step-by-step cabling
- Place the release module RM02 (73) over the slit lamp's cross slide. Four magnets are used for fixing.

© HAAG-STREIT AG, 3098 Koeniz, Switzerland - HS Doc. no. 1500.7220505-04040 – 2019 – 05

01-IFU_BI900-7220505-04040_eng.indd 8 07.06.2019 10:33:46

NOTE!
No external USB devices may be connected to USB ports (85) and (87).

- Insert the camera cable's connector plug (76) into the socket (85).
- Press the cable into the recess on the microscope arm (75).
- Feed computer cable USB 3.0 (73), power supply cable (72), and cable headrest / LED illumination / RM02 (71) through the braided sleeving (70).
- Insert the connector plug of the power supply cable (72) into the socket (86).
- Insert the connector plug of the computer cable USB 3.0 (73) into the (87).
- Pull on the braided sleeving until taut and mount a cable tie (69) on each end.
- Mount a cable cover (91) on the threaded bolts (88) or mount the USB connector screws.
- Connect the headrest cable (68) with its counterpart (67) on the headrest.
- Mount the table board and place the slit lamp on the table.
- Connect the computer cable USB 3.0 (73) to the PC.
- Connect the electric power supply lead (14) to the power supply (13).
- Connect the power supply connector plug to the power grid.
- Plug the headrest cable (1) into the lamp head.

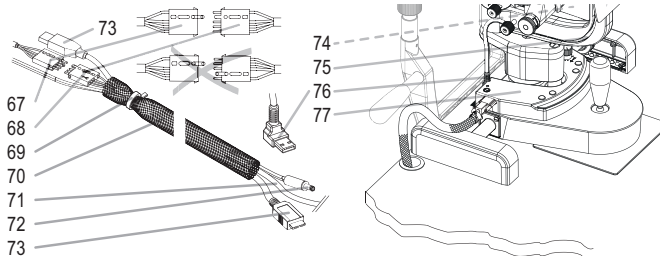

67. Connection plug headrest
68. Connector plug headrest / LED illumination / RM02
69. Cable tie
70. Braided sleeving
71. Cable headrest / LED illumination / RM02
72. Power supply cable
73. Computer cable USB 3.0
74. Camera (not shown)
75. Recess on the microscope arm
76. Connector plug camera cable
77. Release module RM02
78. RM02 operational control LED
79. On/Off key
80. Rotating knob, periphery or background illumination
81. Rotating knob, slit illumination
82. Selector key A
83. Selector key B
84. Release key RM02
85. Socket camera cable
86. Socket for power supply connector plug
87. Socket computer cable USB 3.0 micro B
88. Threaded bolt
89. Pin assignment without imaging set
90. Pin assignment with imaging set
91. Cable cover

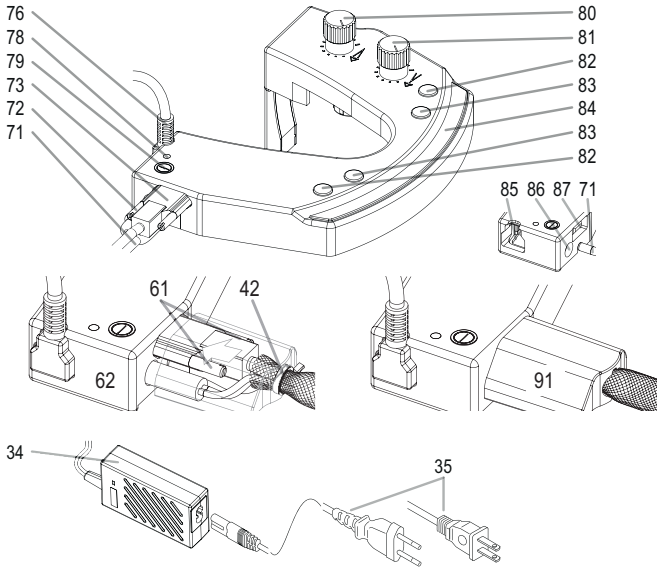

© HAAG-STREIT AG, 3098 Koeniz, Switzerland - HS Doc. no. 1500.7220505-04040 – 2019 – 05

01-IFU_BI900-7220505-04040_eng.indd 9 07.06.2019 10:33:47

4. Startup

4.1 Switching on the device

- Connect the power supply to the power grid and press the On/Off key (79) on the release module RM02. The green operational control LED (78) illuminates when the device is switched on. The camera has no On/Off key and switches on automatically when the PC is switched on.
- Turn the rotating knob on the slit illumination (81) to a position between '1' and '10'.

5. Operation

5.1 Setting the eyepieces

NOTE!
The eyepieces must be individually set prior to the first examination in accordance with the refraction of the examiner. Insert the adjusting pin (92) provided in place of the protective cover (93) and turn its black projection surface at a right angle to the microscope axis. Return the illumination and microscope to the central position (0°).

92. Adjusting pin
93. Protective cover
94. Sliding occluders

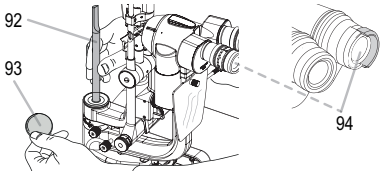

- Each eyepiece should be set individually by turning the knurled ocular refraction ring with dioptre scale until the projected slit can be seen in focus. The setting is performed from the (+) to the (-) side at low magnification.
- The sliding occluders (94) are used to set the correct working distance for the examiner from the eyepiece.
- Examiners who do not wear glasses: Pull the occluders out as far as they will go.
- Examiners who do wear glasses: Push the occluders in as far as they will go.

5.2 Field of view

WARNING!
The images and videos should only be used for documentation purposes. Only the image in the eyepiece may be used for diagnosis.

Field of view of the object, see table
Circle: The field of view of the object observed through the microscope's eyepiece.
Rectangle: Surface area of the sensor:

	Object image section in the eyepiece (mm)	Object image section in the camera with active sensor area (mm)
	10 ×	**6.3 × 5.4**
1 ×	ø 18	21.4 × 18.3
1.6 ×	ø 11.25	14 × 11.8

5.3 White balance

The image quality is dependent on the correct calibration of the color tones to the respective slit lamp illumination. We recommend performing a white balance in order to improve the image quality and achieve a realistic color reproduction.

5.3.1 Slit lamp preparation

1. Turn on the slit lamp
2. Filter position ‹open› (no filter)
3. Set magnification to 16 ×
4. Completely open the slit diaphragm
5. Connect the diffuser upstream
6. Position the Haag-Streit greycard in front of the slit lamp and use it for focusing
7. The brightness of the slit lamp's illumination should be set in such a way that the greycard's structure is clearly discernible.

5.3.2 Conducting a white balance

1. Start the ‹EyeSuite Imaging› software
2. Activate the intensity auto mode
3. Open the ‹White balance› application
4. Start the ‹White balance› by activating the ‹Calibration› function

© HAAG-STREIT AG, 3098 Koeniz, Switzerland - HS Doc. no. 1500.7220505-04040 – 2019 – 05

01-IFU_BI900-7220505-04040_eng.indd 10 07.06.2019 10:33:48

NOTE!
To achieve an optimal result during the white balance, the image must be homogeneously illuminated.

White balance greycard
REF 1021485

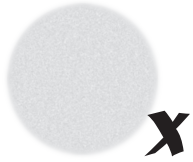

Image is blurry or overexposed

Structure is discernible

5.4 Software / Help menu / Error messages

The software is described in the EyeSuite Imaging instruction for use.

WARNING!
The software must be installed by trained personnel in accordance with separate installation instructions.

5.5 Preparing the patient

- In order to attain a solid basis for the forehead and chin to rest on, the table height should be selected such that the patient sits bent over forward.
- To ensure that only the part of the eye being examined is illuminated, the slit light height should be set accordingly in order to avoid objectionable irradiation.
- After each examination, the LED illumination must be switched off via the release module. See sec. "Decommissioning".

5.6 Operating the instrument

WARNING!
- Before every examination, check that the automatic left to right detection works correctly from the release module!
- The device must be switched off after every use. Otherwise there is a risk of overheating when a protective dust cover is employed.

- Use the turn screw (A) to set the chin rest (B) so that the patient's eyes are at the same height as the black mark (C) on the sides of the head rest.
- Set the eyepieces (26) in accordance with the examiner's refraction by turning the knurled rings and set the eye distance.
- Adjust the height of the slit lamp by turning the control lever until the light beam is at eye level.
- Switch on the illumination by turning the switch on the power supply.
- The magnification of the stereo microscope is changed using the magnification changer (100, chapter 5.9).
- The rigid control lever (30) gently inclined towards the examiner can be used to push the entire device until the slit appears approximately focused on the cornea. This initial setting is verified with the naked eye. Fine tuning is performed by tilting the control lever while observing via the stereo microscope (21).
- The slit width is set left or right with the rotating knob (28), as is the angle between the stereo microscope and illumination. The slit image can be set vertically, horizontally or diagonally as required by turning the illumination facility on the handle (5) (locking points at 45°, 90° and 135°; stops at 0° and 180°; scale in 5° increments).
- To ensure that unimpeded binocular fundus examination is also possible at lateral angles of between 3° and 10°, a short mirror (9)) is used, the illumination turned 90° using the locking screw (5) and tilted in 5° steps using the latch (27), and the illumination and microscope turned to the central position (0°).
- Front-lens glasses and contact glasses are used to examine the ocular fundus.

Diffuse illumination:
- A diffuse illumination is achieved by positioning the diffusor (9) upstream. This enables overview monitoring and can be used for taking overview images with the Imaging Module.

Indirect illumination:
- For observation in regredient light (indirect illumination), the centering screw (25) is loosened in order to move the slit image out of the center of the visual field. Tightening the screw centers the slit image again.

© HAAG-STREIT AG, 3098 Koeniz, Switzerland - HS Doc. no. 1500.7220505-04040 – 2019 – 05

01-IFU_BI900-7220505-04040_eng.indd 11 07.06.2019 10:33:48

Slit tilting:

- The latch (27) can be used to tilt the illumination in 5° steps. This creates an angled light beam during horizontal slit orientation. Tilting the slit enables reflex-free examination with contact glasses (fundus and gonioscopy) and magnifying glasses.

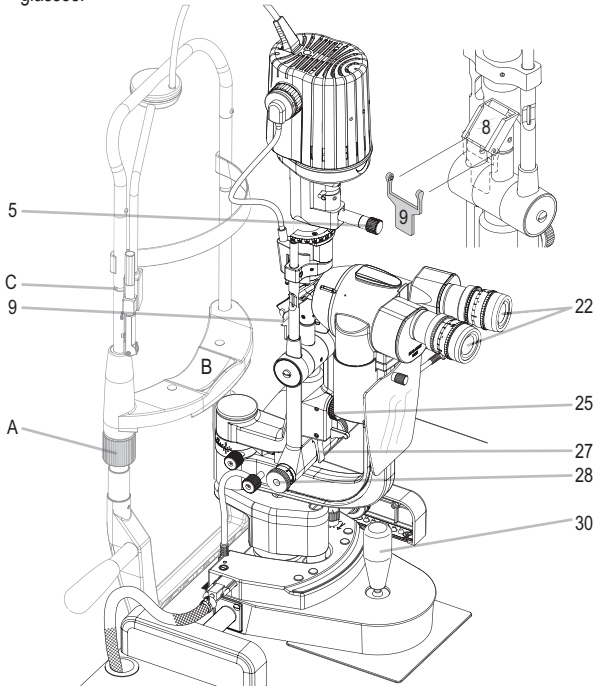

5.7 Setting the filters & diaphragms

a. Open
b. Grey filter (10%)
c. Red removal filter
d. Reserve opening for filter of choice ø15 mm (0 / –0.2), thickness 2.5 mm
e. Fixation star
f. Apertures of 8, 5, 3, 2, 1 and 0.2 mm in ø
g. Display of slit length adjustment from 1 to 14 mm
h. Blue filter

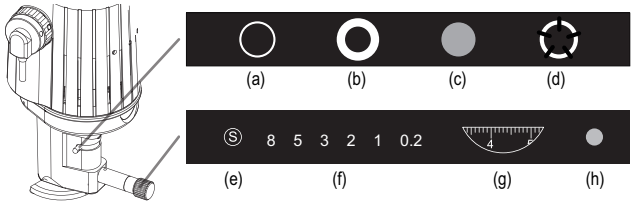

5.8 Fixation star

- Turning the diaphragm disc as far as it will go to the left switches on the fixation star and the symbol "S" appears in the window. This star is projected onto the fundus at the back of the eye in certain examinations and is visible to the patient at the same time, who is asked to focus on the hole in the center of the star. This allows the examiner to see where the patient's vision is most focused.
- A typical application of the fixation star is during laser treatments close to the macula. Similarly, it is also possible to identify microstrabismus with the projection of the fixation star. The fixation star is usually used with a red removal filter.

5.9 Microscope and eyepiece

95. Two objective-lens pairs
96. Lever for yellow filter
97. Cover cap for the accessories base
98. Serial number microscope
99. 10 × or 25 × eyepiece
100. Lens-changing lever
101. Eyepiece retaining screw

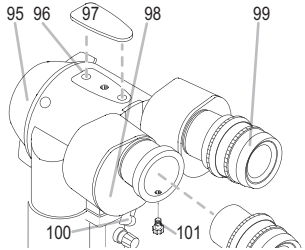

5.10 Reduced operation

In order to ensure that the light sources will have a long lifespan, the power of the periphery or background illumination is reduced somewhat once the maximum op-

© HAAG-STREIT AG, 3098 Koeniz, Switzerland - HS Doc. no. 1500.7220505-04040 – 2019 – 05

01-IFU_BI900-7220505-04040_eng.indd 12 07.06.2019 10:33:49

erating temperature has been reached. Full power can be used again after a short period of time for it to cool down. This operating state is only reached if both light sources are switched on together for a long period of time outside the specified temperature range.

5.11 LED display Illumination head

Operating status	a) Periphery or background illumination ● ○ ○	b) Polarity ○ ● ○	c) Slit lamp illumination ○ ○ ●
Standby mode	Green, short flashes	×	Green, short flashes
Normal operation Slit and periphery or background illumination on	Green	×	Green
Only slit illumination on	Green, short flashes	×	Green
Only periphery or background illumination on	Green	×	Green, short flashes
Reduced periphery of background illumination operation High LED temperature, thus reducing periphery or background illumination operation	Green, flashing	×	Green, flashing

5.12 LED display power supply

Normal operation	Green

5.13 LED display release module RM02

Normal operation	Green
LED illumination switched off	Green, pulsing
Establishing connection	Orange

5.14 LED display camera

Normal operation	Green
Establishing connection	Orange

© HAAG-STREIT AG, 3098 Koeniz, Switzerland - HS Doc. no. 1500.7220505-04040 – 2019 – 05

01-IFU_BI900-7220505-04040_eng.indd 13 07.06.2019 10:33:50

5.15 Error messages (illumination head)

ERROR	Error messages	Measures	a) Periphery or background illumination ● ○ ○	b) Polarity ○ ● ○	c) Slit lamp illumination ○ ○ ●
E1	Incorrect supply polarisation	Contact your Haag-Streit representative.	×	Red	×
E2	Illumination control not recognized	Connect illumination control or replace, if necessary.	Red	×	Red
E3	Temperature is too high	The light sources' power will be reduced. Normal operation is ensured once the permissible temperature has been reached.	Red, flashing	×	Red, flashing
E4	No communication between power supply and illumination	Contact your Haag-Streit representative.	Red, flashing 2 ×	×	Red, flashing 2 ×
E6	General error	Send RM02 to the appropriate service branch.	Red, flashing 4 ×	×	Red, flashing 4 ×

5.16 Error messages release module RM02

ERROR	Error messages	Measures	Operational control LED (78)
E14	No communication with LED illumination LI02 plus	Contact your Haag-Streit representative.	Red, flashing 2 ×
E16	General error	Send device to the appropriate service branch.	Red, flashing 4 ×

5.17 Error messages camera

ERROR	Error messages	Measures	Operational control LED (26)
E18	No communication with LED illumination LI02 plus	Contact your Haag-Streit representative.	Red

© HAAG-STREIT AG, 3098 Koeniz, Switzerland - HS Doc. no. 1500.7220505-04040 – 2019 – 05

01-IFU_BI900-7220505-04040_eng.indd 14 07.06.2019 10:33:50

5.18 Software / Help menu / Error messages

The software's Help section contains instructions and guidance for performing an examination as well as descriptions of the error messages. Help can be opened by pressing the F1 key or by going to the [?] - [Help] menu.

WARNING!
The software must be installed by trained personnel in accordance with separate installation instructions.

6. Decommissioning

Press the On/Off key (79) on the release module RM02 briefly to switch off the LED illumination after the examination. This does not switch off the camera. This is signaled with pulsing green flashing. Pressing the key for approx. 3 sec. switches off the release module completely and the operational control LED (78) goes out. The camera has no separate On/Off switch. It switches off automatically when the PC is switched off.

NOTE!
The On/Off key on the release module RM02 does not disconnect the device from the electric mains. Disconnect the power supply from the power grid by unplugging the mains connector if you do not intend to use it for an extended period of time.

7. Technical data

7.1 Slit illumination

NOTE!
Detailed information regarding the radiation can be provided on request.

Spectral range slit illumination	400 to 750nm
Spectral range periphery or background illumination	400 to 750nm
Slit image width (continuous)	0 – 14 mm
Slit image length (fixed diaphragms)	1 – 14 mm
Illumination field circle	8 / 5 / 3 / 2 / 1 / 0.2 mm in ø
Test mark	with fixation star
Slit image radial range	±90°
Radial (swiveling) movement of the slit illumination to microscope axis	Horizontal ± 90°, vertical 0 – 20°
Filters	Blue, red removal (green), grey (10%).

7.2 Power supply

Type	ICCN EXERGY, ELPAC POWER SYSTEMS,	
Model	MWA030018B	*REF 1022106*
Mains voltage	100 – 240 V	
Current consumption	0.8 A	
Operating frequency	50 – 60 Hz	

7.3 Stereo microscope

Stereo angle	13°			
Magnification changer	1 × and 1.6 ×			
Eyepiece magnification	10 × (standard)			
Magnification changer	10 × / 16 ×, with eyepiece 25 ×: 25 × / 40 ×			
Range of adjusting eyepieces	+6 to -6 dioptres			
Pupil distance	54 – 94 mm			
Filters	Contrast enhancing (yellow)			
Lens	1 ×	1.6 ×	1 ×	1.6 ×
Eyepiece	10 ×	10 ×	25 ×	25 ×
Total magnification	10 ×	16 ×	25 ×	40 ×
Object field diameter	18 mm	11.3 mm	8 mm	5 mm

7.4 Instrument base

Operation:	Single-handed operation of control lever in three dimensions
Adjustment of instrument base:	100 mm (length) 100 mm (side) 30 mm (height)

© HAAG-STREIT AG, 3098 Koeniz, Switzerland - HS Doc. no. 1500.7220505-04040 – 2019 – 05

01-IFU_BI900-7220505-04040_eng.indd 15 07.06.2019 10:33:51

7.5 Dimensions

Weight:	12 kg (without power supply, headrest and options)
Dimensions L × W × H:	310 × 332 × 700 mm
Packaging L × W × H:	420 × 510 × 780 mm

7.6 Camera

Camera beam	Beam path left (from the point of view of the doctor)
Sensor type	CMOS
Interface	USB 3.0
Frame rate	20 fps (frames per second)
Power consumption	5 V ⎓ / 300 mA
Sensor size	7.2 mm × 5.4 mm

7.7 Minimum PC requirements

Processor type	Intel i5, 5th gen or higher with 4 cores. Note: 6th gen is not recommended. 2 cores with hyperthreading are not recommended.
RAM	8 GB RAM if PC is exclusively used to operate the imaging module. 16 GB RAM if third-party applications such as patient administration software are to be used alongside EyeSuite. Use 2 RAM module.
Hard disk	At least 500 GB (NTFS data system).
Graphics	Graphics card with at least 2 GB memory (Nvidia or AMD chip set recommended). OpenGL 2.0
Monitor	At least 19", 1920 × 1080 pixel resolution.
Operating system	Windows 7, Windows 8.1, Windows 10. 64-bit system only.
PCI slot	PCI-Express 3.0
PCI Express card	Chip set by Renesas / NEC.

8. Maintenance

WARNING!
- Do not modify this equipment without authorization of the manufacturer. Installation and repairs may only be performed by trained specialists. Contact your Haag-Streit representative for installation, repairs and modification work on the system. The contact details are available at www.haag-streit.com.
- Only original Haag-Streit replacement parts may be used.

The LED illumination can be operated without any maintenance throughout its entire duration of life.

8.1 Device inspection

The following procedure should be used to check that the slit lamp is working correctly:
- Insert the test rod in the radial movement bearing, while aligning the surface at a right-angle to the microscope
- Set the slit light length to 8 or 14mm
- Illumination intensity to 50%
- Set the magnification in the microscope to max.
- Set the eyepieces so that the structure on the test rod is shown in focus. Turn the eyepiece from the (+) to the (-) side.
- For all magnifications, the structure of the test rod must be shown in focus.
- Close the slit edges to approx. 0.5mm. The edges must be shown in focus.
- Open the slit edges completely and turn the test rod 45°, the area in focus must be in the center of the test rod.

8.2 Repair

To guarantee a long service life, the device must be cleaned weekly as described and protected with the dust cover when not in use. We recommend having the device inspected once a year by an authorized service technician.
In order to guarantee optimal operational integrity, the device must undergo periodic maintenance. The length of the maintenance interval depends on use, but may not exceed 3 years.

8.3 Cleaning and disinfection

The Haag-Streit slit lamps and their accessories can, if required, be carefully wiped down with ready-for-use disposable 70% ethanol disinfectant wipes. Surface-friend-

© HAAG-STREIT AG, 3098 Koeniz, Switzerland - HS Doc. no. 1500.7220505-04040 – 2019 – 05

01-IFU_BI900-7220505-04040_eng.indd 16 07.06.2019 10:33:51

ly disinfectants (containing aldehyde or aldehyde-free) are also permitted, such as Kohrsolin FF.

WARNING!
- The preparation instructions provided do not apply to tonometer measuring prisms!
- Tonometer measuring prisms must be prepared in accordance with a different manual
- Do not use sprays
- Observe the manufacturer's safety instructions
- Do not use any cloths that drip.
- Wring out any soaked cloths before use when necessary
- Ensure that no liquid penetrates the device
- Comply with the stipulated exposure time
- Clean optical surfaces after disinfection with a very soft cloth

NOTE!
IP code: IPX0 (device is not protected against liquids)

8.4 Replacing the illumination mirror

The mirror can be most easily accessed if the microscope is turned away from the illumination and the illumination inclined two points.

WARNING!
Only use mirrors with a LOT number.

8.5 Dust cover

We recommend protecting the slit lamp with a dust cover when not in use.

A. Appendix

A.1. Accessories / consumables / spare parts / upgrade

WARNING!
- Do not modify this equipment without authorization of the manufacturer. Installation and repairs may only be performed by trained specialists. Contact your Haag-Streit representative for installation, repairs and modification work on the system. The contact details are available at www.haag-streit.com.
- Only original Haag-Streit replacement parts may be used.

NOTE!
An asterisk (*) indicates that you should contact your Haag-Streit representative for further information. Two asterisks (**) indicate a need to refer to the separate instructions for use.

Components	*REF*
Dust cover, small (for slit lamp)	*1001395*
Dust cover, large (for several instruments)	*1001434*
Long mirror	*1001590*
Short mirror	*1001591*
Eyepiece 10 × for estimating length BI/BD 900	*7220514*
Eyepiece 10 × with cross hair reticule BI/BD 900	*7220515*
Eyepiece 10 × BI/BD 900	*7220517*
Eyepiece 25 × BI/BD 900	*7220520*
Imaging set BI 900	*7220535*
Release Module RM02 with power supply	*7220546*
Power supply for LED illumination on third-party tables**	*7220741*
Power supply for LED illumination, HSM 901**	*7220742*
Illumination control, double slit and background 'on table'**	*7220743*
Background illumination FI 01f	*7220744*
Illumination control box slit on table (1 Pot.)	*7220745*
Illumination control, double slit and background 'in table'**	*7220746*
Illumination control box slit in table (1 Pot.)	*7220747*
Pad of chin rest papers	*7220756*
Background illumination swivelling	*7220765*

© HAAG-STREIT AG, 3098 Koeniz, Switzerland - HS Doc. no. 1500.7220505-04040 – 2019 – 05

01-IFU_BI900-7220505-04040_eng.indd 17 07.06.2019 10:33:51

Diagnostic contact lenses	Please refer to the instructions for use Contact lenses, Goldmann/Diagnostics/Laser
Applanation Tonometer	Please refer to the instructions for use AT 900 / AT 870 Please refer to the instructions for use AT 900 D
Headrest	Please refer to the instructions for use Headrest

B. Statutory requirements

- The BI 900 slit lamp was developed and designed taking the EN 60601-1, EN ISO 10939 and EN ISO 15004-2 standards into account.
- The EN 60601-1 standard must be observed when using different medical and/or non-medical electrical devices in combination.
- Compliance of the BI 900 slit lamp with the Directive 93/42/EEC is confirmed by the CE-designation.
- The BI 900 slit lamp satisfies the electromagnetic compatibility requirements of EN 60601-1-3. The device has been designed to maintain the emissions of electromagnetic interference at a level which does not exceed the statutory guidelines and which does not affect other devices in its vicinity.
- The device also has the immunity stipulated by the standard.
- Statutory accident regulations are to be observed.

C. Classification

Standard EN 60601-1	Slit lamp BI 900 acc. to protection class II
Operating mode:	Continuous operation
CE Directive 93/42/EEC	Class I
FDA	Class II

D. Disposal

Electrical and electronic devices must be disposed of separately from household waste! This appliance was made available for sale after the 13th August 2005. For correct disposal, please contact your Haag-Streit representative. This will guarantee that no hazardous substances enter the environment and that valuable raw materials are recycled.

E. Observed standards

EN 60601-1	EN 60601-1-2
EN ISO 10939	EN ISO 15004-2

© HAAG-STREIT AG, 3098 Koeniz, Switzerland - HS Doc. no. 1500.7220505-04040 – 2019 – 05

01-IFU_BI900-7220505-04040_eng.indd 18 07.06.2019 10:33:51

F. Information and manufacturer's declaration concerning electromagnetic compatibility (EMC)

F.1 General

The BI 900 slit lamp system fulfills the requirements on electromagnetic compatibility according to EN 60601-1-2:2007 (IEC 3. Edition) + EN 60601-1-2:2015 (IEC 3. Edition). The instrument is built so that the generation and emission of electromagnetic interference is limited to the extent that other devices are not disturbed in their use in accordance with the regulations and so that the instrument itself is suitably immune to electromagnetic interference.

WARNING!
Avoid damages due to high electrostatic discharges (ESD). Electrostatic discharges with voltages exceeding 6 kV to some parts of the slit lamp like joystick or metallic parts on the instrument base may influence the instrument.
- The communication between Imaging Module and PC could be interrupted, which would require a restart of the EyeSuite software.

WARNING!
- Electrical medical devices and systems are subject to special EMC measures and must be installed in accordance with the EMC instructions contained in this accompanying document.
- The operation of other lines or equipment than those listed may lead to higher emissions or may reduce the device's resistance to interference.
- Third-party devices may only be connected in compliance with the EN 60601-1 standard.

F.2 Emitted interference (standard table 1)

The information is based on the requirements of EN 60601-1-2:2007 (IEC 3rd edition) and EN 60601-1-2:2015 (IEC 4th edition).

Guidance and manufacturer's declaration – electromagnetic emissions		
This product is intended for use in the electromagnetic environment specified below. The customer or the user of this product should assure that it is used in such an environment.		
Emission test	**Compliance**	**Electromagnetic environment - guidance**
RF emissions CISPR 11	Group 1	This product uses RF energy only for its internal function. Therefore, its RF emissions are very low and are not likely to cause any interference in nearby electronic equipment.
RF emissions CISPR 11	Class A	This product is suitable for use in all establishments, including domestic establishments and those directly connected to the public low-voltage power supply network that supplies buildings used for domestic purposes.
Emission of harmonics according to EN 61000-3-2	Class A	

© HAAG-STREIT AG, 3098 Koeniz, Switzerland - HS Doc. no. 1500.7220505-04040 – 2019 – 05

01-IFU_BI900-7220505-04040_eng.indd 19 07.06.2019 10:33:52

F.3 Immunity (standard table 2)

The information is based on the requirements of EN 60601-1-2:2007 (IEC 3rd edition).

Guidance and manufacturer's declaration – electromagnetic immunity

This product is intended for use in the electromagnetic environment specified below. The customer or the user of this product should assure that it is used in such an environment.

Immunity test standard	EN 60601 test level	Compliance level	Electromagnetic environment – guidance
Electrostatic discharge (ESD) EN 61000-4-2	± 6 kV contact ± 8 kV air	± 6 kV contact ± 8 kV air	Floors should be wood, concrete or ceramic tile. If floors are covered withs ynthetic material, the relative humidity should be at least 30%.
Electrical fast transient / burst EN 61000-4-4	± 2 kV for power supply lines	± 2 kV for power supply lines	Mains power quality should be that of a typical commercial or hospital environment.
Surge EN 61000-4-5	± 1 kV for symmetrical voltages	± 1 kV for symmetrical voltages	Mains power quality should be that of a typical commercial or hospital environment.
Voltage dips, short interruptions and voltage variations on power supply lines EN 61000-4-11	< 5% U_T (> 95% drop in U_T) for ½ cycle < 40% U_T (> 60% drop in U_T) for 5 cycles < 70% U_T (> 30% drop in U_T) for 25 cycles < 5% U_T (> 95% drop in U_T) for 5 s	< 5% U_T (> 95% drop in U_T) for ½ cycle < 40% U_T (> 60% drop in U_T) for 5 cycles < 70% U_T (> 30% drop in U_T) for 25 cycles < 5% U_T (> 95% drop in U_T) for 5 s	Mains power quality should be that of a typical commercial or hospital environment. If the user of this product requires continued function even in the event of interruptions in the energy supply, this product should be powered from an uninterruptible power supply or a battery.
Power frequency (50/60Hz) magnetic field EN 61000-4-8	3 A/m	100 A/m	Power frequency magnetic fields should be at levels characteristic of a typical location in a typical commercial or hospital environment.

NOTE: U_T= the AC mains voltage prior to application of the test level.

© HAAG-STREIT AG, 3098 Koeniz, Switzerland - HS Doc. no. 1500.7220505-04040 – 2019 – 05

01-IFU_BI900-7220505-04040_eng.indd 20 07.06.2019 10:33:52

F.4 Immunity for non-life support devices (standard table 4)

The information is based on the requirements of EN 60601-1-2:2007 (IEC 3rd edition).

Guidance and manufacturer's declaration – electromagnetic immunity

This product is intended for use in the electromagnetic environment specified below. The customer or the user of this product should assure that it is used in such an environment.

Electromagnetic environment – guidance

Portable and mobile RF communications equipments hould be used no closer to any part of this product, including cables, than the recommended separation distance calculated from the equation applicable to the frequency of the transmitter.

Immunity test standard	EN 60601 test level	Compliance level	Recommended distance[c]:
Conducted RF EN 61000-4-6	3 V_{rms} 150 kHz – 80 MHz	5 V_{rms}	$D = 0.7\sqrt{P}$
Radiated RF EN 61000-4-3	3 V/m 80 MHz – 2.7 GHz	3 V/m 80 MHz – 2.7 GHz	$D = 1.2\sqrt{P}$ 80 MHz – 800 MHz $D = 2.3\sqrt{P}$ 800 MHz – 2.7 GHz

Where ***P*** is the maximum output power rating of thet ransmitter in watts **(W)** according to the transmitter manufacturer and ***D*** is the recommended separation distance in metres **(m)**. Field strengths from fixed RF transmitters, as determined by an electromagnetic site survey [a], should be less than the compliance level in each frequency range [b] Interference may occur in the vicinity of equipment marked with the following symbol:

NOTE 1: At 80 MHz and 800 MHz the higher frequency applies.

NOTE 2: These guidelines may not apply in all situations. Electromagnetic propagation is affected by absorption and reflection from structures, objects and people.

a. Field strengths from fixed transmitters, such as base stations for radio (cellular/cordless) telephones and land mobile radios, amateur radio, AM and FM radio broadcast and TV broadcast cannot be predicted theoretically with accuracy. To assess the electromagnetic environment due to fixed RF transmitters, an electromagnetic site survey should be considered. If the measured field strength in the location in which this product is used exceeds the applicable RF compliance level above, this product should be observed to verify normal operation. If abnormal performance is observed, additional measures may be necessary, such as re-orienting or relocating this product.
b. Over the frequency range 150 kHz to 80 MHz, field strengths should be less than 5 V_{eff}.
c. Possible shorter distances outside the ISM bands do not contribute to improved application in this table.

© HAAG-STREIT AG, 3098 Koeniz, Switzerland - HS Doc. no. 1500.7220505-04040 – 2019 – 05

01-IFU_BI900-7220505-04040_eng.indd 21 07.06.2019 10:33:52

F.5 Safe distances for non-life support devices (standard table 6)

The information is based on the requirements of EN 60601-1-2:2007 (IEC 3rd edition).

Recommended safe distances between portable and mobile HF communication devices and this device.

This product is designed to be operated in an electromagnetic environment in which radiated HF interference is controlled. The customer or user of this product can help to prevent electromagnetic interference by maintaining minimum distances between portable and mobile HF communication systems (transmitters) and this product, as recommended below in accordance with the maximum output of the communication system.

	Safe distance according to transmission frequency (m)		
Nominal output of the transmitter (W)	150 kHz – 80 MHz $D = 0.7\sqrt{P}$	80 MHz – 800 MHz $D = 1.2\sqrt{P}$	800 MHz – 2.7 GHz $D = 2.3\sqrt{P}$
0.01	0.07	0.12	0.23
0.1	0.22	0.38	0.72
1	0.7	1.2	2.3
10	2.2	3.8	7.2
100	7	12	23

For transmitters with a nominal output not listed in the table above, the distance ***D*** can be calculated in meters **(m)** using the equation for the respective column, in which ***P*** is the nominal output of the transmitter in watts **(W)** according to the specifications of the transmitter manufacturer.

NOTE 1:	At 80 MHz and 800 MHz the higher frequency applies.
NOTE 2:	To calculate the recommended safe distance of transmitters in the frequency range of 80 MHz to 2.7 GHz an additional factor of $^{10}/_{3}$ was used to reduce the probability of a mobile/portable communication device causing interference if inadvertently brought into the patient area.
NOTE 3:	These guidelines may not apply in all situations. Electromagnetic wave propagation is influenced by absorption and reflection of buildings, objects and people.

© HAAG-STREIT AG, 3098 Koeniz, Switzerland - HS Doc. no. 1500.7220505-04040 – 2019 – 05

01-IFU_BI900-7220505-04040_eng.indd 22 07.06.2019 10:33:53

© HAAG-STREIT AG, 3098 Koeniz, Switzerland - HS Doc. no. 1500.7220505-04040 – 2019 – 05

01-IFU_BI900-7220505-04040_eng.indd 23 07.06.2019 10:33:53

Should you have any further questions, please contact your Haag-Streit representative at:

http://www.haag-streit.com/contact/contact-your-distributor.html

HAAG-STREIT DIAGNOSTICS

CE

HAAG-STREIT AG
Gartenstadtstrasse 10
3098 Koeniz, Switzerland
Phone +41 31 978 01 11
Fax +41 31 978 02 82
eMail info@haag-streit.com
Internet www.haag-streit.com